Cleaning System

Amajet

Mounting / Installation Manual

Legal information/Copyright

Mounting / Installation Manual Amajet

Contents

1 General

This mounting/installation manual supplements the installation/operating manual of the pump. All information given in the installation/operating manual of the pump must be observed.

Table 1: Relevant operating manuals

Type series	Reference number of the installation/operating manual
Amarex KRT	2553.8820

Table 2: Other documents

Type series	Reference number of the mounting/installation manual
SewerAmajet	1574.85

2 Safety

2.1 Safety information for the user/operator

- Make sure the system cannot be accessed by unauthorised persons (e.g. children).
- Ensure that the danger zone can only be accessed by specialist personnel observing the safety instructions. While the equipment is moving, access to the danger zone must be prevented.
  The danger zone for set-up, maintenance and repair work covers an area of 1 m around the machine and system.
- Keep the area around the system as well as the system operators' work stations free from any objects during operation.
  Ensure unobstructed access at all times.
- Define measures preventing the risk of bacterial infection in waste water system. Provide suitable skin protection, cleaning, disinfection and care products as well as hygienic hand-drying facilities.

2.2 Explosion protection

After the system has been assembled, a test to IEC 60079-14 must be carried out for potentially explosive atmospheres.

3 Transport

⚠ WARNING

Transport unit tipping over

Risk of injury!

- Observe the weight of the transport unit.
- Pay attention to the centre of gravity.
- If necessary, attach suitable lifting tackle to the transport unit prior to transport, to protect the transport unit against tipping over.
- Use the lifting lugs provided.
- Observe the regional transport regulations.

Suspend and transport the packaged system components as illustrated.

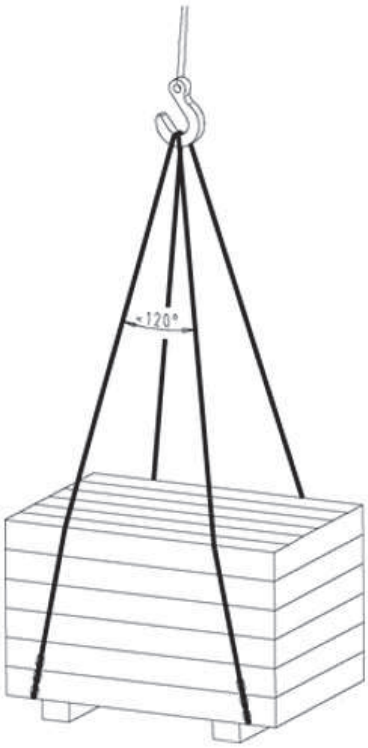

Fig. 1: Transporting the packaged system components

Technical data for transport

Table 3: Technical data for transport

Assembly / transport unit	Weight [kg]	Centre of gravity	Lifting equipment
Multi-turn actuator	Approx. 46 kg	In the middle	Crane or forklift truck (as required)
Stand of the multi-turn actuator	Approx. 50 - 65 kg	In the middle	Crane or forklift truck (as required)
Connection pipe	Approx. 23 -38 kg	In the middle	Crane or forklift truck (as required)

Assembly / transport unit	Weight [kg]	Centre of gravity	Lifting equipment
Ejector	Approx. 16 kg	In the middle	Crane or forklift truck (as required)
Venturi nozzle	Approx. 2 kg	In the middle	Crane or forklift truck (as required)

4 Description

4.1 General description

- Cleaning system for cleaning stormwater retention tanks, stormwater overflow basins, stormwater settling basins and storage sewers

4.2 Designation

Example: Amajet L 100-237/114XEG IE3

Table 4: Designation key

Code	Description	
Amajet	Type series	
	Amajet	
	SewerAmajet	
	SwingAmajet	
L	Installation type	
	L	Horizontal installation
	M	Compact installation
	V	Vertical installation with guide wire and suspension arrangement
100	Nominal discharge nozzle diameter [mm]	
237	Impeller diameter [mm]	
11	Motor size	
4	Number of poles	
XE	Motor version	
	XE	Explosion protection Ⓔx II 2G Ex db h IIB T3 Gb, for fluid temperatures of up to 40 °C[1)]
G	Material variant	
	G	Standard variant, grey cast iron
	G1	Like G, with impeller made of duplex stainless steel
	G2	Like G, with impeller made of white cast iron
	GH	Like G, with impeller and discharge cover made of white cast iron
IE3	Motor efficiency classification	
	[2)]	No efficiency classification
	IE3	Efficiency classification[3)]

4.3 Installation types

Amajet and SewerAmajet are available in the following installation types:

- Horizontal installation L:
  The pump is arranged in a horizontal position.
- Compact installation M:
  The pump is arranged in a horizontal position, turned sideways by 90°.
- Vertical installation V (guide wire arrangement):
  Vertical installation V allows Amajet to be lowered into or pulled out of the pump sump or tank at any fluid level with a twin guide wire arrangement. Guided securely along two pre-tensioned stainless steel guide wires, the pump slides into the sump or tank and attaches itself automatically to the support foot which has been fitted to the floor.

1574.8/01-EN

1 Maximum fluid temperature and ambient temperature

2 Blank

3 IEC 60034-30 standard not binding for submersible motor pumps. Efficiencies calculated/determined according to the measurement method specified in IEC 60034-2. The marking is used for submersible motors that achieve efficiency levels similar to those of standardised motors acc. to the IEC 60034-30 standard.

The pump weight ensures tight sealing between the pump and support foot. A profile joint between the pump and support foot provides a pressure-proof elastic connection. It is not necessary to enter the pump sump or tank for carrying out inspection and maintenance work on the pump.

4.4 Configuration and function

Function Amajet, arranged close to the tank floor, sucks in the fluid and transports it to the Venturi nozzle. The narrow passage through the reducing nozzle increases the flow velocity in and downstream of the nozzle, producing a negative pressure in the mixing chamber compared to the fluid surrounding it and compared to the atmosphere. Through the vent pipe this negative pressure draws in air, which is mixed with the fluid in the mixing chamber. The fluid-air mixture is ejected through the ejection pipe as a high-velocity jet that is horizontal to the tank floor. The combined effects of the water jet and the small air bubbles in the fluid generate a powerful horizontal flow with a large vertical reach in the tank. The turbulences caused in the entire tank by both transverse and longitudinal flows lift up the solids and keep them suspended. During drainage the sludge is carried out of the tank at an even rate to prevent peak demand periods for biological waste water purification.

Design The system is available in 3 variants:

- Amajet
- SewerAmajet
- SwingAmajet

4.4.1 Variants Amajet/SewerAmajet

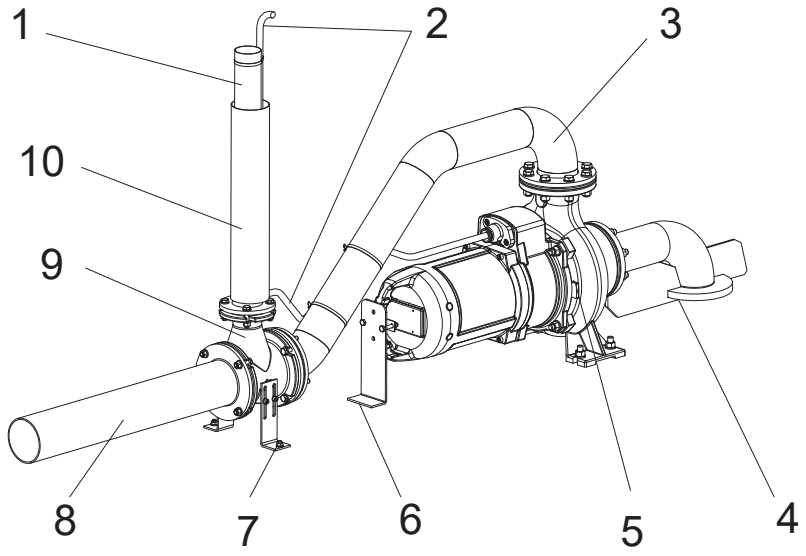

Fig. 2: Amajet configuration

1	Vent pipe	2	Power cable
3	Connection pipe	4	Suction elbow
5	Pump	6	Support foot
7	Adjustable supporting angle	8	Ejection pipe
9	Ejector set	10	Cable conduit

The basic variant comprises a submersible motor pump (5), a connection pipe (3) and an ejector set (9) with vent pipe (1).

This variant is called Amajet. SewerAmajet is a combination of this basic variant with a lifting magnet (not shown in the illustration).
SewerAmajet is intended for use in storage sewers only.

1574.8/01-EN

Suction elbow variants [4)]

- **Floor suction variant**
  This is the standard design with the suction nozzle installed as close as possible to the tank floor. This means the fill level for operation measured at the Amajet can be as low as approx. 70 mm. The flange arranged on the inlet side largely prevents inlet swirl. A minimum distance of only 50 mm between the floor and the inlet flange prevents clogging of the Venturi nozzle.
- **Channel suction variant**
  For tanks with a slightly sloping floor (up to approx. 2 %), channel suction is advantageous for the last cleaning phase. To prevent flushed-back heavy particles such as sand from being pumped back into the tank, a minimum distance of 100 mm must be provided between the channel invert and the suction-side inlet. The suction elbow must be arranged close to the side wall of the channel and adjusted to a distance of 50 mm from the inclined channel wall. Drain channels must therefore be designed as very smooth half-shells with a slope of 3 % as a minimum.
- **Sump suction variant**
  This variant is generally designed like the channel suction variant with an extended suction pipe on the sump side. It enables fluid to be sucked in from sloping, lower-level sumps.

4.4.2 Variant SwingAmajet

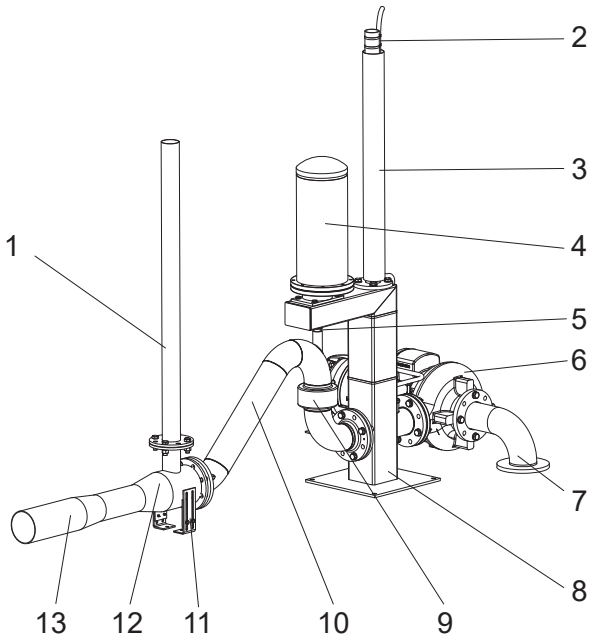

Fig. 3: SwingAmajet configuration

1	Vent pipe	2	Cable guide pipe
3	Cable conduit	4	Multi-turn actuator
5	Actuating shaft	6	Pump
7	Suction elbow	8	Stand
9	Spherical plain bearing (swivel joint)	10	Connection pipe
11	Adjustable supporting angle	12	Venturi nozzle
13	Ejector		

4 Only for horizontal installation L and compact installation M

SwingAmajet comprises a submersible motor pump (6), a connection pipe (10), an ejector (12) with vent pipe (1) as well as a swivel joint (9) with multi-turn actuator (4). The optional control unit is not shown in the illustration.
SwingAmajet is especially suitable for cleaning tanks of all shapes (round, rectangular or asymmetrical).

Suction elbow variants

- **Floor suction variant**
  This is the standard design with the suction nozzle installed as close as possible to the tank floor. This means the fill level for operation measured at the Amajet can be as low as approx. 70 mm. The flange arranged on the inlet side largely prevents inlet swirl. A minimum distance of only 50 mm between the floor and the inlet flange prevents clogging of the Venturi nozzle.
- **Channel suction variant**
  For tanks with a slightly sloping floor (up to approx. 2 %), channel suction is advantageous for the last cleaning phase. To prevent flushed-back heavy particles such as sand from being pumped back into the tank, a minimum distance of 100 mm must be provided between the channel invert and the suction-side inlet. The suction elbow must be arranged close to the side wall of the channel and adjusted to a distance of 50 mm from the inclined channel wall. Drain channels must therefore be designed as very smooth half-shells with a slope of 3 % as a minimum.
- **Sump suction variant**
  This variant is generally designed like the channel suction variant with an extended suction pipe on the sump side. It enables fluid to be sucked in from sloping, lower-level sumps.

4.5 Scope of supply

Depending on the model, the following items are included in the scope of supply:

- Pump
- Ejector set
- Actuator
- Piping components
- Installation parts:
  - Small parts (sealing elements, bolts/screws, anchor bolts)
  - Protection hose (for SwingAmajet)
  - Fastening elements for additional connecting pipe (for Amajet / SewerAmajet)

Accessories (optional)

- Microprocessor-controlled OP Fluid Control® III control unit
- Holder for the suspension wire

NOTE

For a detailed scope of supply refer to the order confirmation.

4.6 Dimensions and weights

For dimensions and weights please refer to the type series booklet of the cleaning system.

1574.8/01-EN

5 Installation at Site

5.1 General information on installation

Positioning, installation and commissioning must only be carried out by specialist personnel qualified for this type of work.

1. Perform the installation in accordance with the variant-specific drawings and the external operating manuals.
2. Install the further components in accordance with the technical documents. Install the piping.

5.2 Installing SwingAmajet

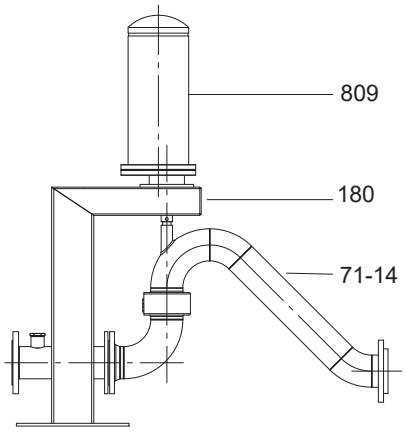

Fig. 4: As-supplied condition of SwingAmajet

Multi-turn actuator 809 is supplied mounted on and aligned with actuator stand 180 and connection pipe 71-14. Prior to delivery the connecting screw between actuator 809 and connection pipe 71-14 is removed.

The following is not included in the scope of supply:

- Acid-resistant and waste water-resistant expanding foam for filling the area between the actuator stand plate and the floor
- UV-resistant cable ties for fastening the cables

5.2.1 Fastening the actuator stand

1. Fasten actuator stand 180 to the floor with the supplied heavy-duty anchor bolts. For versions with fully threaded studs fasten the actuator stand to the floor with locknuts.
   The maximum permissible distance between the actuator stand plate and the floor is 50 mm.
2. Fill the gap between the floor and the actuator stand plate with expanding foam to prevent dirt deposits.
3. Remove any protruding foam once it has hardened.

5.2.2 Fitting the ejector

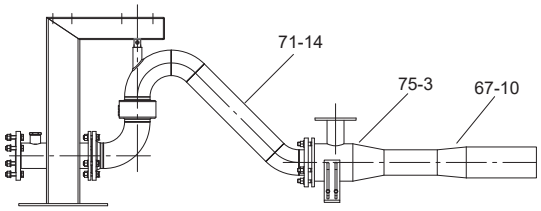

Fig. 5: Fitting the ejector

1. Connect the flange of ejector 67-10 including Venturi nozzle 75-3 to the flange of connection pipe 71-14.
   Make sure that the flange for the vent pipe allows for a perfectly vertical installation of the vent pipe. The supporting angles can be used as a mounting aid for this step.
   After the installation, return the supporting angles to their original position.

5.2.3 Installing the pump

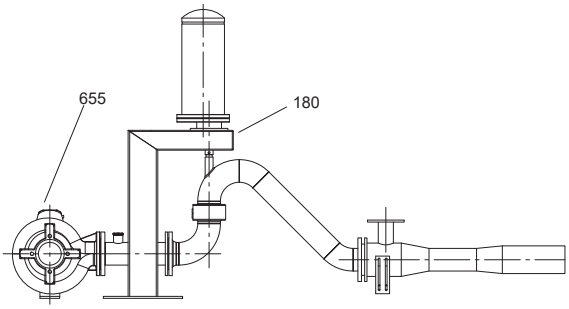

Fig. 6: Installing the pump

1. Install pump 655 in accordance with the separate general arrangement drawing, and connect it to actuator stand 180.

5.2.4 Aligning the components

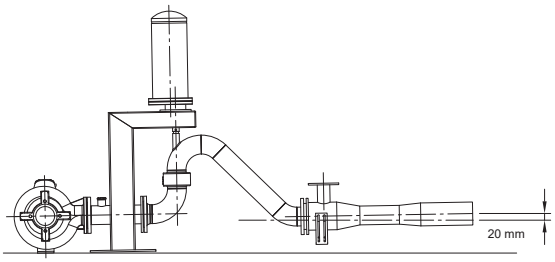

Fig. 7: Aligning the components

The installed components have to be aligned in accordance with the site conditions.

1. Arrange the ejector with a rising slope so that the end of its ejection pipe is approx. 20 mm off the horizontal.
   Depending on the site conditions, use fully threaded studs or the supplied wedges for this purpose.

5.2.5 Mounting the multi-turn actuator

1. Manually move connection pipe 71-14 to zero position.
2. Fit the connecting screw between multi-turn actuator 809 and connection pipe 71-14.

CAUTION

Manually adjusting the ejector after installation of the multi-turn actuator

Damage to the multi-turn actuator!

- ▹ After the multi-turn actuator has been installed, always adjust the ejector via the electric control of the multi-turn actuator.

5.2.6 Fitting the vent pipe

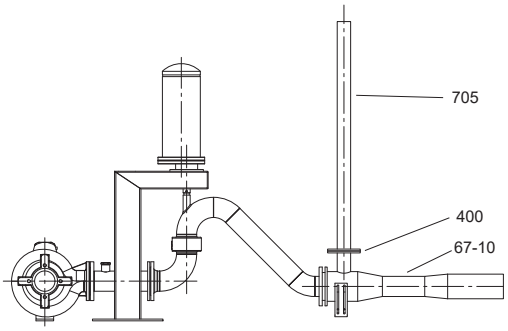

Fig. 8: Fitting the vent pipe

1. Determine the length of vent pipe 705 required at the site.
   The upper end of the vent pipe must be approx. 100 mm above the maximum water level.
2. Shorten vent pipe 705 as required by the site conditions.
3. Fit vent pipe 705 with sealing element 400 to ejector 67-10.

NOTE

The standard length supplied is 4000 mm. If a vent pipe of more than 4000 mm length is required, contact KSB.

5.2.7 Fitting the cable guide pipe and cable conduit

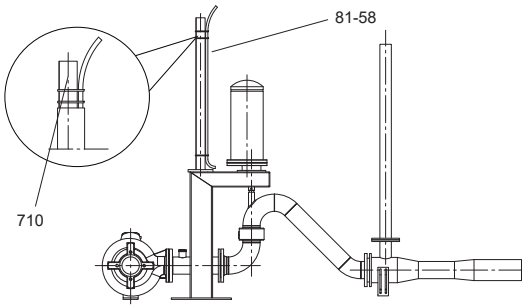

Fig. 9: Fitting the cable guide pipe and cable conduit

1. Cut cable outlet openings into cable conduit 81-58.
2. Guide the power cables of the pump motor and of the Amajet multi-turn actuator into the space between cable guide pipe 710 and cable conduit 81-58.
3. Protect the power cables with one protection hose each.
4. Fasten the power cables in the outlet with UV-resistant cable ties.

5.2.8 Fastening the power cable with a suspension wire (optional)

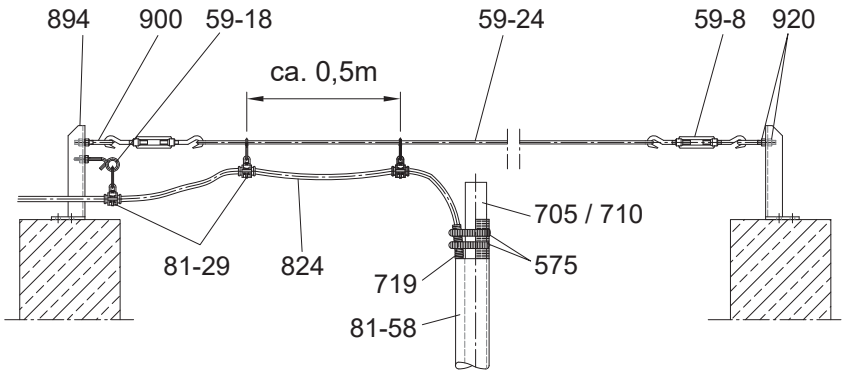

Fig. 10: Routing the cable with a suspension wire

Table 5: List of components

Part No.	Description	Part No.	Description
59-8	Turnbuckle	710	Cable guide pipe (for SwingAmajet)
59-18	Swing hook	719	Cable protection hose
59-24	Wire	824	Power cable
81-29	Cable clamp	894	Mounting bracket
81-58	Cable conduit	900	Screw (eye screw)
575	Strip (cable tie)	920	Nut
705	Vent pipe (for Amajet)		

For an open tank we recommend fastening the cables with a suspension wire as illustrated.
This version is not included in the scope of supply. For any queries please contact KSB or the engineering contractor.

5.2.9 Installing the suction elbow

1. Fasten suction elbow 139 to the suction flange of the pump with a DN100 sealing element and 4 M16x60 studs.

The various suction elbow designs are described in (⇨ Section 4.4, Page 10) .

1574.8/01-EN

5.3 Installing Amajet

5.3.1 Horizontal installation L

5.3.1.1 Fastening the motor support foot

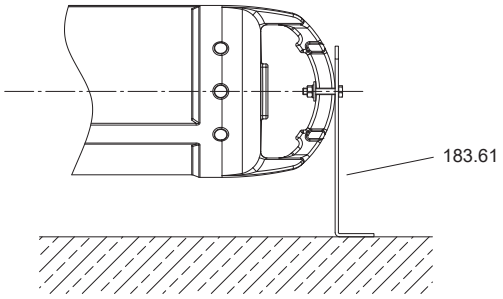

Fig. 11: Fastening the motor support foot

1. Fasten motor support foot 183.61 to the outside of the motor housing bail with two M10x55 bolts and the clamping piece inserted behind the bail.
   Do not fasten the support foot to the floor.
   The support foot serves as an assembly aid only and remains on the motor bail.

5.3.1.2 Fitting the connection pipe

1. Fasten discharge-side connection pipe 71-14 to the pump's discharge flange with four M16x80 bolts.
   A loose plate flange is used for fastening, which enables every horizontal position of the connection pipe. The pipe position can also be adjusted at a later stage.

5.3.1.3 Fitting the ejector

1. If any special pipe sections are to be fitted, flange them to connection pipe 71-14 in accordance with the general arrangement drawing.
2. Flange ejector set 67-10 to connection pipe 71-14 or to the special pipe section (see general arrangement drawing).
3. Arrange ejector set 67-10 with a slightly rising slope so that the end of its ejection pipe is approx. 30 mm off the horizontal.
4. Roughly align ejector set 67-10 horizontally.
   The final alignment is performed when the Amajet is positioned in the place it will be fastened in.

5.3.1.4 Preparing the vent pipe

1. Determine the length of vent pipe 705 required at the site.
   The upper end of the vent pipe must be at least 100 mm above the maximum water level, taking into account any overflows or rising sections.
   If the tank is covered, observe a minimum distance of 100 mm between the cover and the vent pipe.
2. Shorten vent pipe 705 as required by the site conditions.

5.3.1.5 Fitting the vent pipe and routing the power cable

NOTE

Fitting cable conduit 81-58 is optional. Refer to the order confirmation for the scope of supply.

1. Place vent pipe 705 next to ejector 67-10, so they are parallel to each other. The flanged end has to be close to the supporting angles of the ejector.
2. Fasten the motor power cable to connection pipe 71-14 with two cable ties.
3. Route the motor power cable along vent pipe 705.
4. Cut the supplied protection hose 719 in half. A slit can be cut into the protection hose to facilitate its installation.
5. Pull protection hose 719 onto the motor power cable in the area of the outlet openings.
   Pull on one half at the outlet opening at the Amajet and fasten it with a hose clip.
   Temporarily fasten the other half to the end of the vent pipe with a hose clip.
6. If cable conduit 81-58 is used, cut it to length. Cut cable outlet openings at a height of 50 mm with a width of 3/4 of the circumference of vent pipe 705.

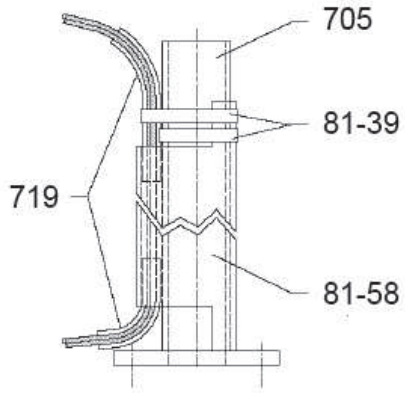

Fig. 12: Routing the power cable with cable conduit along the vent pipe

7. Fasten cable conduit 81-58 fitted over vent pipe 705 with hose clip 81-39.
8. Fasten the motor power cable in the areas of protection hose 719 with another hose clip 81-39. Tighten the hose clip.
   Make sure that it does not cut into the protection hose.
9. Temporarily fasten the remaining length of the power cable to vent pipe 705 with hose clips 81-39.
10. Fasten vent pipe 705 with sealing element 400 and four M12x45 bolts to ejector 67-10.

NOTE

After the vent pipe has been fitted to the ejector, the power cable can be fastened at a point above the water level. (⇨ Section 5.2.8, Page 16) Further routing of the power cable is the responsibility of the engineering contractor.

5.3.1.6 Installing the suction elbow

1. Fasten suction elbow 139 to the suction flange of the pump with a DN100 sealing element and 4 M16x60 studs.

The various suction elbow designs are described in (⇨ Section 4.4, Page 10) .

1574.8/01-EN

5.3.1.7 Locking Amajet in place

Amajet, designed with a free-flow impeller for cleaning purposes, has low vibration levels.

1. Fit a locking pin at each pump foot, observing a depth of 20 mm.
   In the case of a level installation surface, two locking pins in diagonal arrangement are sufficient. At a floor gradient exceeding 5 %, Amajet has to be fastened with anchor bolts.

5.3.2 Compact installation M

Regardless of the position of the pump's discharge nozzle, the motor power cable always has to point upwards.

1. Place the pump onto the suction nozzle.
2. Loosen nuts 920.01.
3. Slightly lift up the motor.
4. Adjust the motor power cable so it points upwards with the discharge nozzle in its installed position (see general arrangement drawing).
5. Tighten nuts 920.01 again. Tightening torque M12 = 60 Nm.

5.3.2.1 Fastening the motor support foot

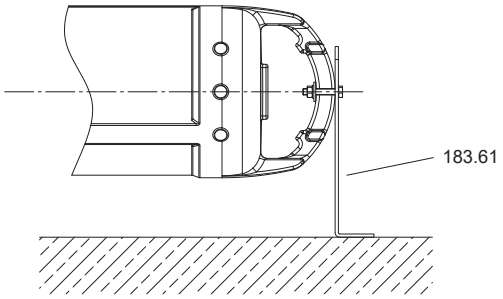

Fig. 13: Fastening the motor support foot

✓ The pump position given in the general arrangement drawing has been observed: The discharge nozzle has been turned sideways by 90°; the inspection hole points upwards.

1. Fasten motor support foot 183.61 to the outside of the motor housing bail with two M10x55 bolts and the clamping piece inserted behind the bail.
   Do not fasten the support foot to the floor.
   The support foot serves as a support structure only and remains fastened to the motor housing bail.

5.3.2.2 Fitting the pump foot plate

1. Fasten pump foot plate 892.61 to the lower pump foot with M16x40 bolts in accordance with the general arrangement drawing.

5.3.2.3 Fitting the ejector

1. If applicable, flange the special pipe sections to discharge elbow 144 in accordance with the general arrangement drawing.
2. Flange ejector set 67-10 to discharge elbow 144 or to the special pipe section (see general arrangement drawing).

3. Arrange ejector set 67-10 with a slightly rising slope so that the end of its ejection pipe is approx. 30 mm off the horizontal.
4. Roughly align ejector set 67-10 horizontally.
   The final alignment is performed when the Amajet is positioned in the place it will be fastened in.

5.3.2.4 Preparing the vent pipe

1. Determine the length of vent pipe 705 required at the site.
   The upper end of the vent pipe must be at least 100 mm above the maximum water level, taking into account any overflows or rising sections.
   If the tank is covered, observe a minimum distance of 100 mm between the cover and the vent pipe.
2. Shorten vent pipe 705 as required by the site conditions.

5.3.2.5 Fitting the vent pipe and routing the power cable

NOTE

Fitting cable conduit 81-58 is optional. Refer to the order confirmation for the scope of supply.

1. Place vent pipe 705 next to ejector 67-10, so they are parallel to each other. The flanged end has to be close to the supporting angles of the ejector.
2. Fasten the motor power cable to connection pipe 71-14 with two cable ties.
3. Route the motor power cable along vent pipe 705.
4. Cut the supplied protection hose 719 in half. A slit can be cut into the protection hose to facilitate its installation.
5. Pull protection hose 719 onto the motor power cable in the area of the outlet openings.
   Pull on one half at the outlet opening at the Amajet and fasten it with a hose clip.
   Temporarily fasten the other half to the end of the vent pipe with a hose clip.
6. If cable conduit 81-58 is used, cut it to length. Cut cable outlet openings at a height of 50 mm with a width of 3/4 of the circumference of vent pipe 705.

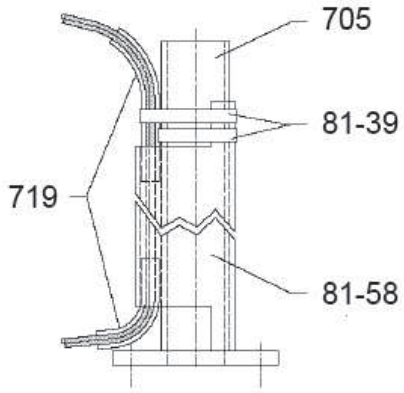

Fig. 14: Routing the power cable with cable conduit along the vent pipe

7. Fasten cable conduit 81-58 fitted over vent pipe 705 with hose clip 81-39.
8. Fasten the motor power cable in the areas of protection hose 719 with another hose clip 81-39. Tighten the hose clip.
   Make sure that it does not cut into the protection hose.

1574.8/01-EN

9. Temporarily fasten the remaining length of the power cable to vent pipe 705 with hose clips 81-39.
10. Fasten vent pipe 705 with sealing element 400 and four M12x45 bolts to ejector 67-10.

NOTE

After the vent pipe has been fitted to the ejector, the power cable can be fastened at a point above the water level. (⇨ Section 5.2.8, Page 16) Further routing of the power cable is the responsibility of the engineering contractor.

5.3.2.6 Installing the suction elbow

1. Fasten suction elbow 139 to the suction flange of the pump with a DN100 sealing element and 4 M16x60 studs.

The various suction elbow designs are described in (⇨ Section 4.4, Page 10) .

5.3.2.7 Locking Amajet in place

Amajet, designed with a free-flow impeller for cleaning purposes, has low vibration levels.

1. Fit a locking pin at each pump foot, observing a depth of 20 mm.
   In the case of a level installation surface, two locking pins in diagonal arrangement are sufficient. At a floor gradient exceeding 5 %, Amajet has to be fastened with anchor bolts.

5.3.3 Vertical installation V

General assembly drawing (⇨ Section 9.1, Page 42) for the following work.

5.3.3.1 Fitting the claw

1. Fasten claw 732 to the discharge flange of the pump casing with hexagon head bolts.
2. Insert profile seal 410.35 into the groove of claw 732.
   This profile seal will provide sealing to support foot 183 when the system is fully installed.

5.3.3.2 Fitting the bracket / support foot / guide wire

⚠ WARNING

Installation on a mounting surface which is unsecured and cannot support the load

Personal injury and damage to property!

- ▹ Observe the required compressive strength (minimum B 25 to DIN 1045).
- ▹ Observe the weights indicated.

Fitting the mounting bracket

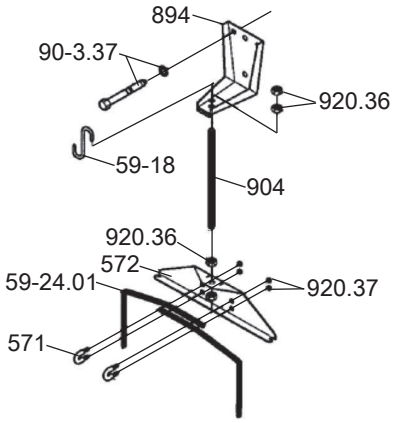

Fig. 15: Fitting the mounting bracket

1. Fasten mounting bracket 894 to the edge of the sump opening with anchor bolts 90-3.37 and tighten the anchor bolts to a tightening torque of 10 Nm.
2. Insert clamping pieces 571 through the holes of suspension bracket 572 and fasten with nuts 920.37.
3. Fasten fully threaded stud 904 with the pre-assembled clamping arrangement to the mounting bracket with nut 920.36.
   Tighten nut 920.36 allowing sufficient play for subsequently tensioning the guide wire.

Fastening the support foot

1. Position support foot 183 on the floor of the sump or tank so the tensioned guide wire will be in a vertical position. Fasten the support foot in this position with steel anchor bolts.
   Tightening torque for the anchor bolts Ø 12: 25 Nm

NOTE

Should site conditions/piping layout, etc. require the wire to run off the vertical, do not exceed a maximum angle of 5° to ensure reliable fitting and guiding of the pump set.

1574.8/01-EN

Inserting the guide wire

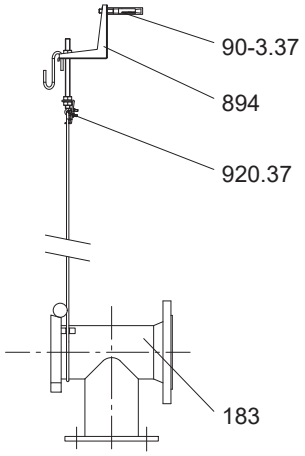

Fig. 16: Inserting the guide wire

1. Lift clamping piece 571 and insert one end of the guide wire.
2. Run wire 59-24.01 around support foot 183 and back again to suspension bracket 572 and insert it into clamping piece 571.
3. Manually tension wire 59-24.01 and secure it by means of hexagon nuts 920.37.
4. Pull the wire taut by tightening hexagon nuts 920.36 on the upper side of the mounting bracket to a torque of M_A = 14 Nm and a wire tension force P = 6000 N.
5. Secure the nuts with a second hexagon nut.
6. The loose wire ends at guide wire suspension bracket 572 can either be twisted into a ring or the end can be cut off.
   After length adjustment, tape the ends to avoid fraying.
7. Attach hook 59-18 to mounting bracket 894 for attaching the lifting chain / lifting rope at a later stage.

5.3.3.3 Fitting the ejector

1. Flange ejector set 67-10 to support foot 183.
2. Arrange ejector set 67-10 with a slightly rising slope so that the end of its ejection pipe is approx. 30 mm off the horizontal.
3. Roughly align ejector set 67-10 horizontally.
   The final alignment is performed when the Amajet is positioned in the place it will be fastened in.

5.3.3.4 Preparing the vent pipe

1. Determine the length of vent pipe 705 required at the site.
   The upper end of the vent pipe must be at least 100 mm above the maximum water level, taking into account any overflows or rising sections.
   If the tank is covered, observe a minimum distance of 100 mm between the cover and the vent pipe.
2. Shorten vent pipe 705 as required by the site conditions.

5.3.3.5 Fitting the vent pipe

1. Fasten vent pipe 705 with sealing element 400 and four M12x45 bolts to ejector 67-10.

5.4 Installing SewerAmajet

5.4.1 Horizontal installation L

5.4.1.1 Fastening the motor support foot

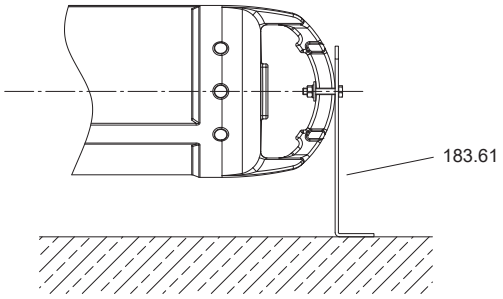

Fig. 17: Fastening the motor support foot

1. Fasten motor support foot 183.61 to the outside of the motor housing bail with two M10x55 bolts and the clamping piece inserted behind the bail.
   Do not fasten the support foot to the floor.
   The support foot serves as an assembly aid only and remains on the motor bail.

5.4.1.2 Fitting the connection pipe

1. Fasten discharge-side connection pipe 71-14 to the pump's discharge flange with four M16x80 bolts.
   A loose plate flange is used for fastening, which enables every horizontal position of the connection pipe. The pipe position can also be adjusted at a later stage.

5.4.1.3 Fitting the ejector

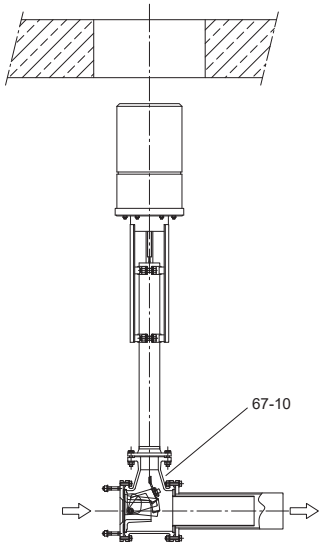

Fig. 18: Design of an ejector set for producing shock waves

1574.8/01-EN

See the mounting/installation manual of SewerAmajet ejector set for producing shock waves

1. If any special pipe sections are to be fitted, flange them to connection pipe 71-14 in accordance with the general arrangement drawing.
2. Flange the ejector set to connection pipe 71-14 or to the special pipe section (see general arrangement drawing).
3. Arrange ejector set 67-10 with a slightly rising slope so that the end of its ejection pipe is approx. 30 mm off the horizontal.
4. Roughly align ejector 67-10 horizontally.
   Ejector 67-10 has to be arranged in such a way that the water jet cannot reach beyond the tank / channel edge.
   The final alignment is performed when the Amajet is positioned in the place it will be fastened in.

5.4.1.4 Preparing the vent pipe

1. Determine the length of vent pipe 705 required at the site.
   The upper end of the vent pipe must be at least 100 mm above the maximum water level, taking into account any overflows or rising sections.
   If design variants for producing shock waves are used in a covered tank (without ventilation shaft) a minimum distance of 640 mm between the cover and the vent pipe has to be observed.
2. Shorten vent pipe 705 as required by the site conditions.

5.4.1.5 Fitting the vent pipe and routing the power cable

NOTE

Fitting cable conduit 81-58 is optional. Refer to the order confirmation for the scope of supply.

1. Place vent pipe 705 next to ejector 67-10, so they are parallel to each other. The flanged end has to be close to the supporting angles of the ejector.
2. Fasten the motor power cable to connection pipe 71-14 with two cable ties.
3. Route the motor power cable along vent pipe 705.
4. Cut the supplied protection hose 719 in half. A slit can be cut into the protection hose to facilitate its installation.
5. Pull protection hose 719 onto the motor power cable in the area of the outlet openings.
   Pull on one half at the outlet opening at the Amajet and fasten it with a hose clip.
   Temporarily fasten the other half to the end of the vent pipe with a hose clip.
6. If cable conduit 81-58 is used, cut it to length. Cut cable outlet openings at a height of 50 mm with a width of 3/4 of the circumference of vent pipe 705.

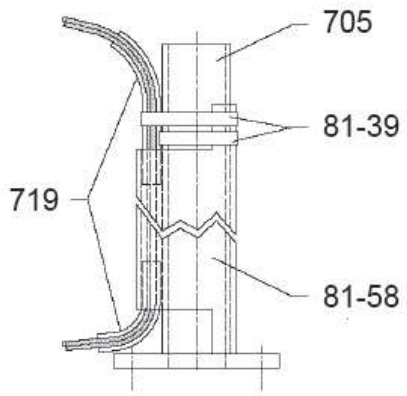

Fig. 19: Routing the power cable with cable conduit along the vent pipe

7. Fasten cable conduit 81-58 fitted over vent pipe 705 with hose clip 81-39.
8. Fasten the motor power cable in the areas of protection hose 719 with another hose clip 81-39. Tighten the hose clip.
   Make sure that it does not cut into the protection hose.
9. Temporarily fasten the remaining length of the power cable to vent pipe 705 with hose clips 81-39.
10. Fasten vent pipe 705 with sealing element 400 and four M12x45 bolts to ejector 67-10.

NOTE

After the vent pipe has been fitted to the ejector, the power cable can be fastened at a point above the water level. (⇨ Section 5.2.8, Page 16) Further routing of the power cable is the responsibility of the engineering contractor.

5.4.1.6 Installing the suction elbow

1. Fasten suction elbow 139 to the suction flange of the pump with a DN100 sealing element and 4 M16x60 studs.

The various suction elbow designs are described in (⇨ Section 4.4, Page 10) .

5.4.1.7 Locking Amajet in place

Amajet, designed with a free-flow impeller for cleaning purposes, has low vibration levels.

1. Fit a locking pin at each pump foot, observing a depth of 20 mm.
   In the case of a level installation surface, two locking pins in diagonal arrangement are sufficient. At a floor gradient exceeding 5 %, Amajet has to be fastened with anchor bolts.

5.4.2 Compact installation M

Regardless of the position of the pump's discharge nozzle, the motor power cable always has to point upwards.

1. Place the pump onto the suction nozzle.
2. Loosen nuts 920.01.
3. Slightly lift up the motor.
4. Adjust the motor power cable so it points upwards with the discharge nozzle in its installed position (see general arrangement drawing).
5. Tighten nuts 920.01 again. Tightening torque M12 = 60 Nm.

5.4.2.1 Fastening the motor support foot

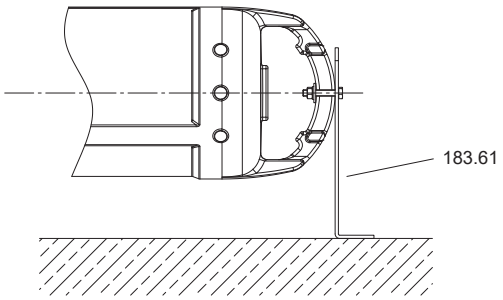

Fig. 20: Fastening the motor support foot

✓ The pump position given in the general arrangement drawing has been observed: The discharge nozzle has been turned sideways by 90°; the inspection hole points upwards.

1. Fasten motor support foot 183.61 to the outside of the motor housing bail with two M10x55 bolts and the clamping piece inserted behind the bail.
   Do not fasten the support foot to the floor.
   The support foot serves as a support structure only and remains fastened to the motor housing bail.

5.4.2.2 Fitting the pump foot plate

1. Fasten pump foot plate 892.61 to the lower pump foot with M16x40 bolts in accordance with the general arrangement drawing.

5.4.2.3 Fitting the ejector

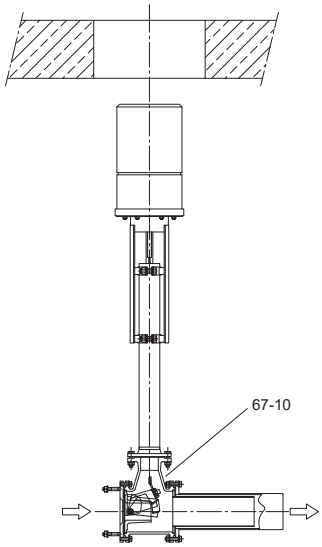

Fig. 21: Design of an ejector set for producing shock waves

See the mounting/installation manual SewerAmajet ejector set for producing shock waves

1. If applicable, flange the special pipe sections to discharge elbow 144 in accordance with the general arrangement drawing.
2. Flange the ejector set to discharge elbow 144 or to the special pipe section (see general arrangement drawing).

3. Arrange ejector set 67-10 with a slightly rising slope so that the end of its ejection pipe is approx. 30 mm off the horizontal.
4. Roughly align ejector set 67-10 horizontally.
   Ejector set 67-10 has to be arranged in such a way that the water jet cannot reach beyond the tank / channel edge.
   The final alignment is performed when the Amajet is positioned in the place it will be fastened in.

5.4.2.4 Preparing the vent pipe

1. Determine the length of vent pipe 705 required at the site.
   The upper end of the vent pipe must be at least 100 mm above the maximum water level, taking into account any overflows or rising sections.
   If design variants for producing shock waves are used in a covered tank (without ventilation shaft) a minimum distance of 640 mm between the cover and the vent pipe has to be observed.
2. Shorten vent pipe 705 as required by the site conditions.

5.4.2.5 Fitting the vent pipe and routing the power cable

NOTE

Fitting cable conduit 81-58 is optional. Refer to the order confirmation for the scope of supply.

1. Place vent pipe 705 next to ejector 67-10, so they are parallel to each other. The flanged end has to be close to the supporting angles of the ejector.
2. Fasten the motor power cable to connection pipe 71-14 with two cable ties.
3. Route the motor power cable along vent pipe 705.
4. Cut the supplied protection hose 719 in half. A slit can be cut into the protection hose to facilitate its installation.
5. Pull protection hose 719 onto the motor power cable in the area of the outlet openings.
   Pull on one half at the outlet opening at the Amajet and fasten it with a hose clip.
   Temporarily fasten the other half to the end of the vent pipe with a hose clip.
6. If cable conduit 81-58 is used, cut it to length. Cut cable outlet openings at a height of 50 mm with a width of 3/4 of the circumference of vent pipe 705.

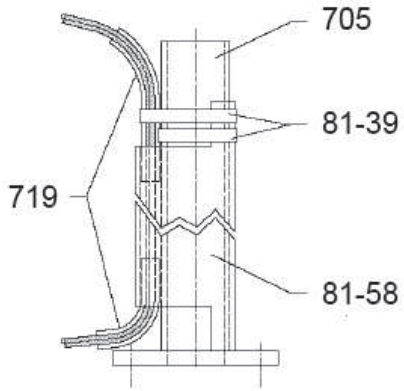

Fig. 22: Routing the power cable with cable conduit along the vent pipe

7. Fasten cable conduit 81-58 fitted over vent pipe 705 with hose clip 81-39.
8. Fasten the motor power cable in the areas of protection hose 719 with another hose clip 81-39. Tighten the hose clip.
   Make sure that it does not cut into the protection hose.

1574.8/01-EN

9. Temporarily fasten the remaining length of the power cable to vent pipe 705 with hose clips 81-39.
10. Fasten vent pipe 705 with sealing element 400 and four M12x45 bolts to ejector 67-10.

NOTE

After the vent pipe has been fitted to the ejector, the power cable can be fastened at a point above the water level. (⇨ Section 5.2.8, Page 16) Further routing of the power cable is the responsibility of the engineering contractor.

5.4.2.6 Installing the suction elbow

1. Fasten suction elbow 139 to the suction flange of the pump with a DN100 sealing element and 4 M16x60 studs.

The various suction elbow designs are described in (⇨ Section 4.4, Page 10) .

5.4.2.7 Locking Amajet in place

Amajet, designed with a free-flow impeller for cleaning purposes, has low vibration levels.

1. Fit a locking pin at each pump foot, observing a depth of 20 mm.
   In the case of a level installation surface, two locking pins in diagonal arrangement are sufficient. At a floor gradient exceeding 5 %, Amajet has to be fastened with anchor bolts.

5.4.3 Vertical installation V

General assembly drawing (⇨ Section 9.1, Page 42) for the following work.

5.4.3.1 Fitting the claw

1. Fasten claw 732 to the discharge flange of the pump casing with hexagon head bolts.
2. Insert profile seal 410.35 into the groove of claw 732.
   This profile seal will provide sealing to support foot 183 when the system is fully installed.

5.4.3.2 Fitting the bracket / support foot / guide wire

⚠ WARNING

Installation on a mounting surface which is unsecured and cannot support the load

Personal injury and damage to property!

- ▹ Observe the required compressive strength (minimum B 25 to DIN 1045).
- ▹ Observe the weights indicated.

Fitting the mounting bracket

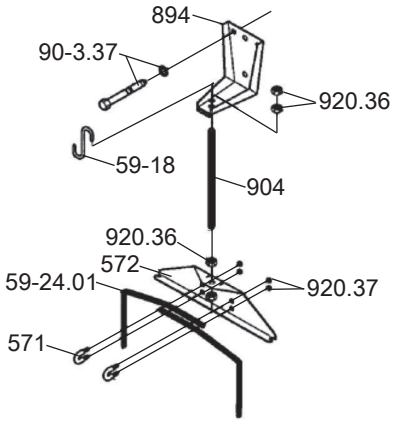

Fig. 23: Fitting the mounting bracket

1. Fasten mounting bracket 894 to the edge of the sump opening with anchor bolts 90-3.37 and tighten the anchor bolts to a tightening torque of 10 Nm.
2. Insert clamping pieces 571 through the holes of suspension bracket 572 and fasten with nuts 920.37.
3. Fasten fully threaded stud 904 with the pre-assembled clamping arrangement to the mounting bracket with nut 920.36.
   Tighten nut 920.36 allowing sufficient play for subsequently tensioning the guide wire.

Fastening the support foot

1. Position support foot 183 on the floor of the sump or tank so the tensioned guide wire will be in a vertical position. Fasten the support foot in this position with steel anchor bolts.
   Tightening torque for the anchor bolts Ø 12: 25 Nm

NOTE

Should site conditions/piping layout, etc. require the wire to run off the vertical, do not exceed a maximum angle of 5° to ensure reliable fitting and guiding of the pump set.

1574.8/01-EN

Inserting the guide wire

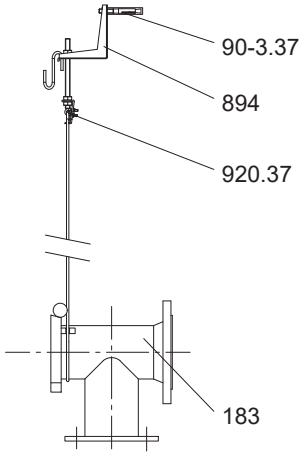

Fig. 24: Inserting the guide wire

1. Lift clamping piece 571 and insert one end of the guide wire.
2. Run wire 59-24.01 around support foot 183 and back again to suspension bracket 572 and insert it into clamping piece 571.
3. Manually tension wire 59-24.01 and secure it by means of hexagon nuts 920.37.
4. Pull the wire taut by tightening hexagon nuts 920.36 on the upper side of the mounting bracket to a torque of M_A = 14 Nm and a wire tension force P = 6000 N.
5. Secure the nuts with a second hexagon nut.
6. The loose wire ends at guide wire suspension bracket 572 can either be twisted into a ring or the end can be cut off.
   After length adjustment, tape the ends to avoid fraying.
7. Attach hook 59-18 to mounting bracket 894 for attaching the lifting chain / lifting rope at a later stage.

5.4.3.3 Fitting the ejector

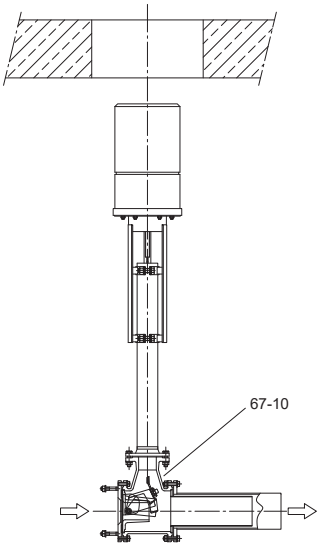

Fig. 25: Design of an ejector set for producing shock waves

1. Flange ejector set 67-10 to support foot 183.
2. Arrange ejector set 67-10 with a slightly rising slope so that the end of its ejection pipe is approx. 30 mm off the horizontal.
3. Roughly align ejector 67-10 horizontally.
   Ejector 67-10 has to be arranged in such a way that the water jet cannot reach beyond the tank / channel edge.
   The final alignment is performed when the Amajet is positioned in the place it will be fastened in.

5.4.3.4 Preparing the vent pipe

1. Determine the length of vent pipe 705 required at the site.
   The upper end of the vent pipe must be at least 100 mm above the maximum water level, taking into account any overflows or rising sections.
   If design variants for producing shock waves are used in a covered tank (without ventilation shaft) a minimum distance of 640 mm between the cover and the vent pipe has to be observed.
2. Shorten vent pipe 705 as required by the site conditions.

5.4.3.5 Fitting the vent pipe

1. Fasten vent pipe 705 with sealing element 400 and four M12x45 bolts to ejector 67-10.

6 Commissioning/Start-up

6.1 Prerequisites for commissioning/start-up

Before commissioning/starting up the pump set, make sure that the following conditions are met:

- The on/off parameters have been adjusted to the site conditions.
- The swivelling speed has been adjusted to the site conditions.

6.2 Ambient temperature

CAUTION

Operation outside the permissible ambient temperature

Damage to the system!

▹ Observe the specified limits for permissible ambient temperatures.

Observe the following parameters and values during operation:

Table 6: Permissible ambient temperatures

Permissible ambient temperature	Value
Maximum	+40 °C
Minimum	+5 °C

Operation in winter: open tanks

Drain the tank prior to any frost events. Thin layers of ice caused by rainwater freezing over are permissible.

Take suitable precautions to prevent draining and cleaning if there is any risk of frost. E.g. use a thermometer with a sensor measuring the outside temperature. The pump will only be started up after a minimum delay of 0.5 hours with consideration of the lower temperature limit.

If a microprocessor-controlled OP Fluid Control® III control unit is used, an input terminal is provided for connecting an external sensor.

7 Servicing/Maintenance

7.1 Safety regulations

DANGER

Incorrect cleaning with solvents

Explosion hazard!

Fire hazard!

Personal injury by swallowing, breathing in or wetting the skin!

- Do not use solvents for cleaning.
- Remove any sludge residues with a water jet.

DANGER

Work on the system without draining the system first

Risk of drowning!

- Drain the system.
- Close the inlet / outlet.

WARNING

Risk by bacteria in waste water systems

Risk of infection!

- No eating, drinking or smoking.
- Wear personal protective equipment (protective clothing, protective gloves, safety goggles, respiratory protective equipment).
- After the work has been completed, thoroughly clean the protective equipment.

WARNING

Unqualified personnel performing work on the unit

Risk of injury!

- Always have repair work and maintenance work performed by specially trained, qualified personnel.

CAUTION

Screwed / bolted or clamped connections loosened by vibrations

Damage to machinery!

- Regularly check the system for any loosened connections.
  Recommended interval for three-shift operation: 3 months

NOTE

The system has a service life of approx. 10 years. After that time, a maintenance inspection (followed by a general overhaul if necessary) has to be carried out by the manufacturer or a specialist company.

NOTE

Instructions for servicing / cleaning individual bought-in components (e.g. submersible motor pump, multi-turn actuator, Venturi nozzle) can be found in the corresponding manufacturers' operating manuals.

Prior to any cleaning, servicing or repair work, always observe the shutdown procedure:

1. Drain the system.
2. Close the inlet / outlet.
3. Secure it against unintentional start-up.
   Always make sure the electrical connections are disconnected before carrying out any work.

7.2 Maintenance/inspection

Tests/inspections

Table 7: Overview of functional tests

Test interval[5]	Assembly
Monthly	All rotating and moving machinery elements (visual inspection)
Every 6 months	All bearings[6]
Annually	Swivel joint

Maintenance work

KSB recommends the following regular servicing schedule:

Table 8: Overview of maintenance work

Maintenance interval[5]	Maintenance work
Annually	Visually inspecting the lubricant in the swivel joint
Every 6 months	Checking that the pump set and actuator are properly fastened to the tank floor
Monthly	Checking the degree of contamination of the suction system and discharge system
Monthly	Checking the functionality of the swivel joint (⇨ Section 7.2.1.1, Page 36)

NOTE

Component assemblies with their own CE conformity marking have to be cleaned, lubricated, serviced and repaired in accordance with the manufacturers' operating manuals.
They are included in the technical file.

Checking the system

After completion of the work, check the following:

- Check the completeness of any repair work conducted.
- Check that no tools or residual materials have been left behind in the system.

1574.8/01-EN

5 The intervals given are based on (single-shift operation) 8 hours/day, 21 days/month, 12 months/year.
6 Replace after 90 % of the bearing life (indicated by the manufacturer).

7.2.1 Inspection work

7.2.1.1 Servicing the swivel joint in the pipe bend

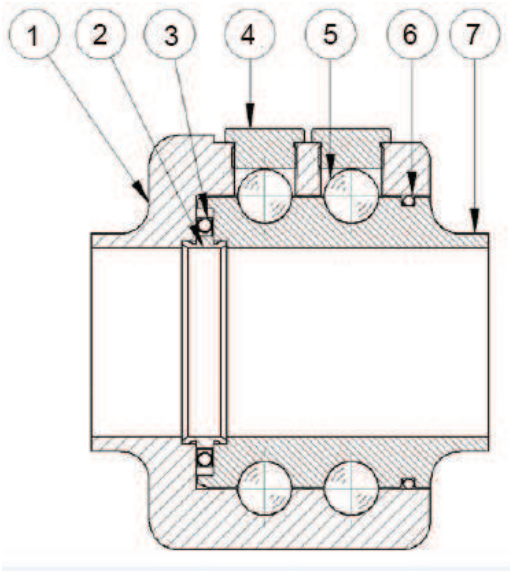

Fig. 26: Positions for maintenance

1	Outer part	2	Scraper ring
3	Fluid sealing element	4	Plug
5	Balls	6	Outer sealing element
7	Inner part		

Should any leakage occur due to worn sealing elements or other failures, take the pipe swivel joints out of service. Check and repair.
The pipe swivel joints can be repaired in the operator's workshops in accordance with the dismantling and reassembly instructions.

When repairing the pipe swivel joints, replace the lubricant.
(⇨ Section 7.2.2.1, Page 37)
Use the recommended lubricant or a lubricant stocked at the site that is suitable for the operating conditions.

If no leakage occurs, the sealing elements do not need to be replaced at specific intervals.

Dismantling, repairing and reassembly

1. Remove the plugs (4).
2. Fasten the outer part (1) in a vice with the plug bores facing down.
3. Turn the inner part (7) until all balls (5) have fallen out. If necessary, use a magnet.
4. Pull out the inner part (7).
5. Remove the outer sealing element (6).
6. Remove the scraper ring (2).
7. Remove the fluid sealing element (3).
8. Clean the outer part (1) and inner part (7).
9. Fit a new outer sealing element (6).
10. Fit a new fluid sealing element (3).
11. Fit a new scraper ring (2).
12. Grease the outer part (1) and inner part (7) in the area of the ball races and the sealing elements. (⇨ Section 7.2.2.2, Page 37)
13. Fasten the outer part (1) in a vice with the plug bores facing up.

14. Insert the inner part (7).
15. Fit the balls (5); slowly turn the inner part (7) during this process.
16. Close the bores for inserting the balls with plugs (4) again.

7.2.1.2 Checking the multi-turn actuator

As standard the multi-turn actuator is equipped with a three-phase motor or a direct current motor. Its torque profile is characterised by a high breakaway torque. The maximum swivelling range is set at the factory to 280°. The motor is controlled by internal cam switches.
Actual-position feedback is provided by an installed potentiometer.
The actuator is supplied with power via a speed control module.

The multi-turn actuator with flameproof enclosure does not require any maintenance. After approx. 8500 operating hours we recommend checking the actuator and replacing the wear parts.

Only personnel specially trained by the supplier may carry out work on the multi-turn actuator in IP68 EEx design with flameproof enclosure.

7.2.2 Lubrication and lubricant change

NOTE

For information on the lubrication type, scope and interval of individual component assemblies refer to the external manufacturers' operating manuals.

7.2.2.1 Lubricating the swivel joint

As standard, pipe swivel joints are supplied lubricated with lubricant suitable for the operating conditions. Leakage at the pipe swivel joint can cause a loss in lubricant. Prior to re-lubrication visually inspect the lubricant level. To do so, unscrew the plugs at the swivel joint but do not remove the balls.

The visual inspection must be carried out in accordance with the table below:

Table 9: Visual inspection of the lubricant

Operation	Visual inspection at operating temperature <= 80 °C	Visual inspection at operating temperature > 80 °C
Single-shift operation	Every 24 months	Every 12 months
Multi-shift operation	Every 12 months	Every 6 months

Observe the steps and information on dismantling and reassembling the swivel joint. (⇨ Section 7.2.1.1, Page 36)

7.2.2.2 Recommended lubricant

Recommended lubricant:
BERUTOX FH 28 EPK-2
High-temperature and high-pressure grease for long-term lubrication

Table 10: Lubricant quality

Description	Properties	
Synthetic oil	Kinematic viscosity at 40 °C	470 mm^2/s
	Kinematic viscosity at 100 °C	40 mm^2/s
	Flash point (to Cleveland)	+275 °C
	Solidification point (pour point)	-37 °C

The data indicated are reference values. Deviations within the usual tolerances may occur, however, they will not impair the lubricant quality. Further data on request.

7.3 Cleaning

Observe the general safety instructions and information. (⇨ Section 7.1, Page 34)

KSB recommends the following regular cleaning schedule:

Table 11: Overview of cleaning measures

Cleaning interval[7)]	Cleaning work
Monthly	Clean the suction pipe and suction channel as well as the Venturi nozzle of any coarse contamination / solids (depending on the water quality).
Daily	Keep the entire area around the system clean.
Daily	After the end of a shift, clean all system components from any contamination. Do not use any cleaning agents containing solvents.

NOTE

Dispose of any residual material, cleaning waste and cleaning materials in an environmentally friendly manner.

7.4 Dismantling SwingAmajet

✓ The pump set has been switched off properly.

✓ Connection pipe 71-14 is in its zero position.

1. Remove the connecting screw between multi-turn actuator 809 and connection pipe 71-14.
2. Remove multi-turn actuator 809.
3. Undo the bolts fastening adapter plate 82-5 to the actuator stand. Remove the adapter plate.
4. Undo the hexagon socket countersunk head screw at the torque transmission bolt of actuating shaft 213. Remove the actuating shaft.
5. Undo the bolts fastening ejector 67-10 to the connection pipe. Remove the ejector.
6. Undo connection pipe 71-14 at actuator stand 180.
7. Undo the heavy-duty anchor bolts or locknuts of actuator stand 180. Remove the actuator stand.

1574.8/01-EN

7 The intervals given are based on (single-shift operation) 8 hours/day, 21 days/month, 12 months/year.

7.5 Installing SwingAmajet

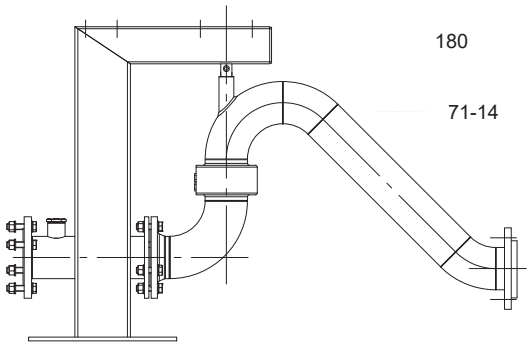

Fig. 27: Actuator stand - Installing the connection pipe

1. Connect actuator stand 180 to the swivelling connection pipe (pipe bend) 71-14 with a bolt.
   Make sure that the torque transmission bolt is fitted in a perfectly vertical position at the swivel joint.
2. Fasten actuator stand 180 to the floor with the supplied heavy-duty anchor bolts. For versions with fully threaded studs fasten the actuator stand to the floor with locknuts. (⇨ Section 5.2.1, Page 13)

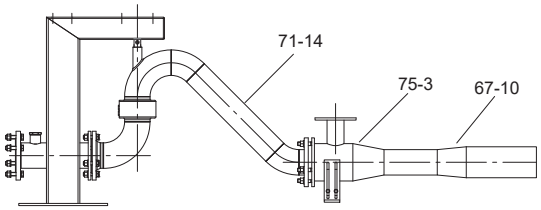

Fig. 28: Fitting the ejector

3. Connect the flange of ejector 67-10 including Venturi nozzle 75-3 to the flange of connection pipe 71-14.
   Make sure that the flange for the vent pipe allows for a perfectly vertical installation of the vent pipe. The supporting angles can be used as a mounting aid for this step.
   After the installation, return the supporting angles to their original position.

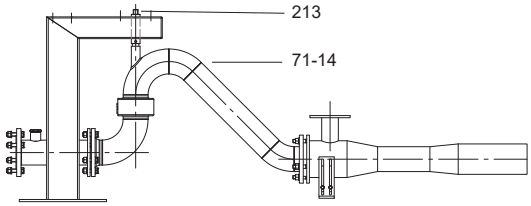

Fig. 29: Mounting the actuating shaft

4. Place actuating shaft 213 on the torque transmission bolt at connection pipe 71-14. Fasten the actuating shaft to the torque transmission bolt with the supplied hexagon socket countersunk head screw.
   Make sure that the shaft is fitted in a perfectly vertical position.

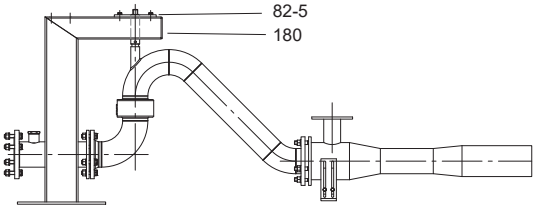

Fig. 30: Fitting the adapter plate

5. Place adapter plate 82-5 on actuator stand 180. Fasten it to the actuator stand with the supplied bolts.

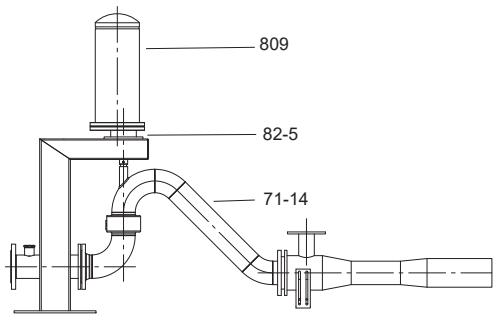

Fig. 31: Mounting the multi-turn actuator

6. Manually move connection pipe 71-14 to zero position.

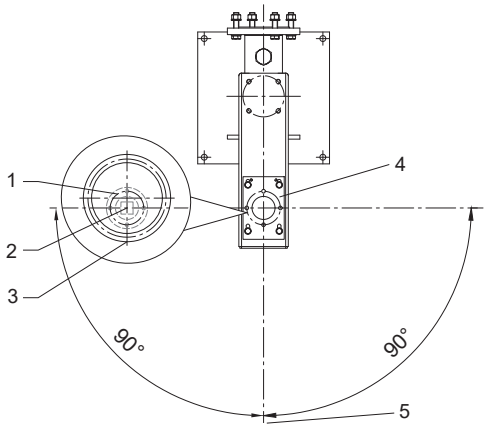

Fig. 32: Assembly sketch of the multi-turn actuator

1	Flange pattern	2	Square socket, as-supplied condition
3	Marking	4	Adapter plate
5	Zero position		

7. Mount multi-turn actuator 809 in accordance with the Assembly sketch of the multi-turn actuator.
8. Use adapter plate 82-5 for the precision alignment of multi-turn actuator 809 with actuating shaft 213.
9. Fasten multi-turn actuator 809 to connection pipe 71-14 with the connecting screw.
   Observe the marking at the components.

CAUTION

Manually adjusting the ejector after installation of the multi-turn actuator

Damage to the multi-turn actuator!

- ▹ After the multi-turn actuator has been installed, always adjust the ejector via the electric control of the multi-turn actuator.

10. Perform a functional check. Test whether the swivel joint can be swivelled by 90° in both directions from its zero position.

1574.8/01-EN

8 Trouble-shooting

⚠ WARNING

Improper work to remedy faults

Risk of injury!

- For any work performed to remedy faults, observe the relevant information given in this operating manual and/or in the product literature provided by the accessories manufacturer.

In an emergency stop the system.

A Pump set cannot be switched on

B Pump delivers insufficient flow rate

C No-load current when operation requested

Pump is running, but does not deliver

D No production of shock waves

E No swivelling movement in automatic and manual operation

Motor protection switch triggered.

F Motor is overloaded

Table 12: Trouble-shooting

A	B	C	D	E	F	Possible cause	Remedy
✗	-	-	-	-	-	Master switch in “0” position Overcurrent protection protection has tripped.	Switch on the master switch. Ask a specialist to remedy the fault.
-	✗	-	-	-	-	Impeller blocked by solids Venturi nozzle clogged / defective Throttle valve clogged / defective	Remove any solids. Replace the Venturi nozzle / throttle valve.
-	-	✗	-	-	-	Air pocket due to incorrect alignment work. Venturi nozzle clogged by solids Throttle valve clogged by solids	Align Amajet in accordance with the operating manual. Clean the Venturi nozzle / throttle valve. Check that the distance between the intake elbow and the floor measures 50 mm.
-	-	-	✗	-	-	No automatic operation Wire between lifting magnet and throttle valve defective Zero voltage assembly module defective Lifting magnet defective	Switch to automatic operation Replace the wire. Replace the module. Replace the lifting magnet.
-	-	-	-	✗	-	Installation not perfectly vertical Swivelling cleaning system blocked by solids at the ejector Speed module defective Control current fuse defective Damaged bearing at the swivel joint	Correct the installation. Remove the solids. Replace the speed module. Check / replace the fuses. Replace the swivel joint.
-	-	-	-	-	✗	Restricted swivelling range	Level the tank floor in the swivelling range. Remove any solid obstacles. Re-align the multi-turn actuator. Observe the installation manual.

9 Related Documents

9.1 General assembly drawings with list of components

9.1.1 SwingAmajet

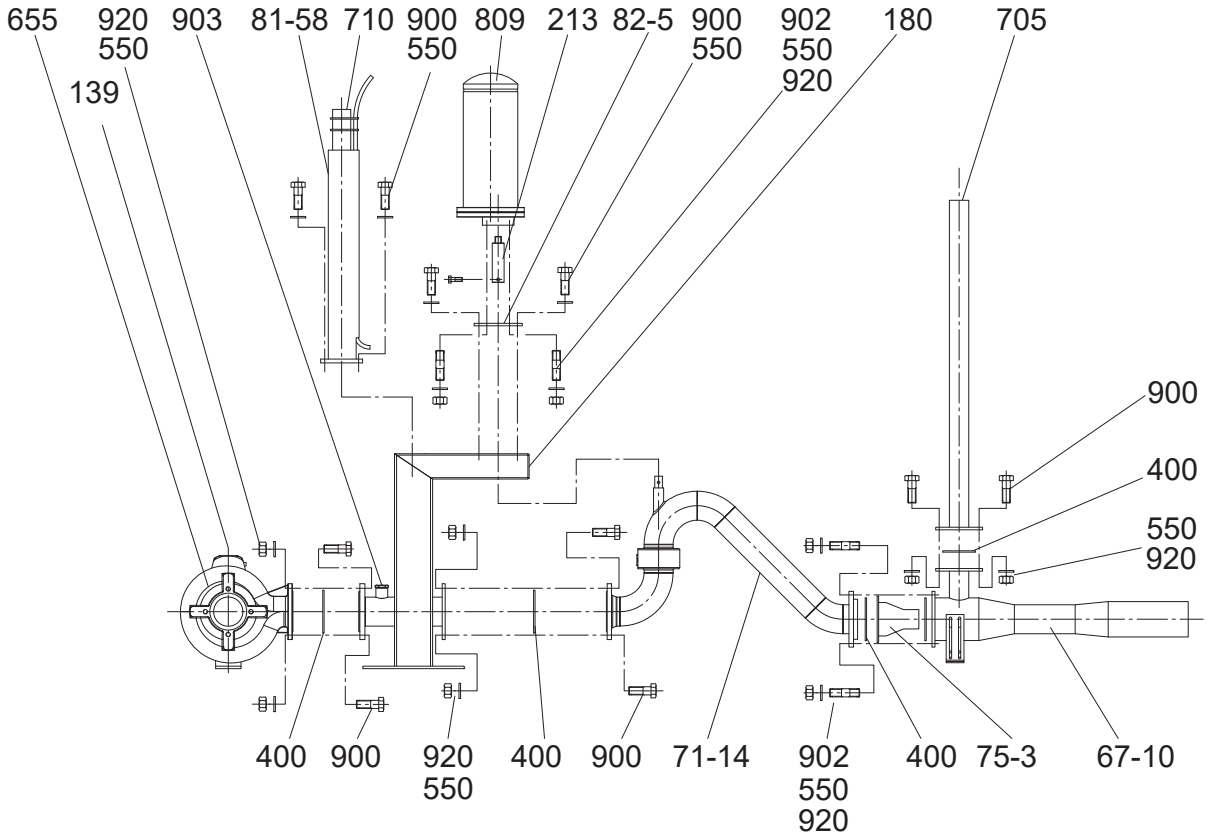

Fig. 33: SwingAmajet

Table 13: List of components

Part No.	Description	Part No.	Description
67-10	Ejector	550	Disc
71-14	Connection pipe	655	Pump
75-3	Venturi nozzle	705	Vent pipe
81-58	Cable conduit	710	Cable guide pipe
82-5	Adapter plate	809	Multi-turn actuator
139	Suction elbow	900	Bolt/screw
180	Actuator stand	902	Stud
213	Actuating shaft	903	Screw plug
400	Gasket	920	Nut

1574.8/01-EN

9.1.2 Amajet L

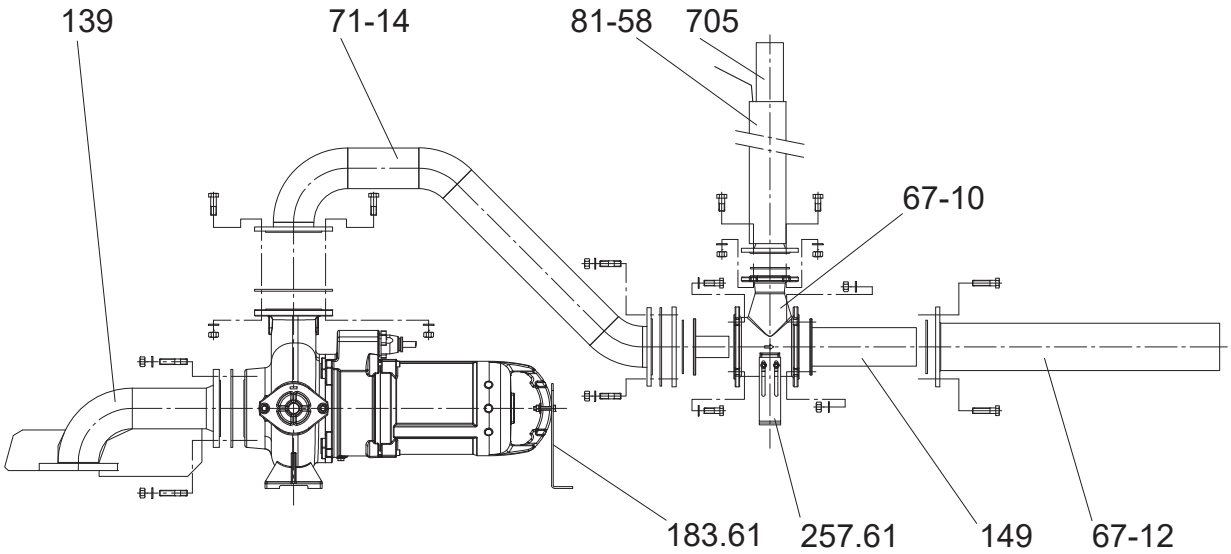

Fig. 34: Amajet L

Table 14: List of components

Part No.	Description	Part No.	Description
67-10	Ejector set	149	Diffusor
67-12	Ejection pipe	183.61	Support foot
71-14	Connection pipe	257.61	Adjusting strip
81-58	Cable conduit	705	Vent line
139	Suction elbow		

9.1.3 Amajet M

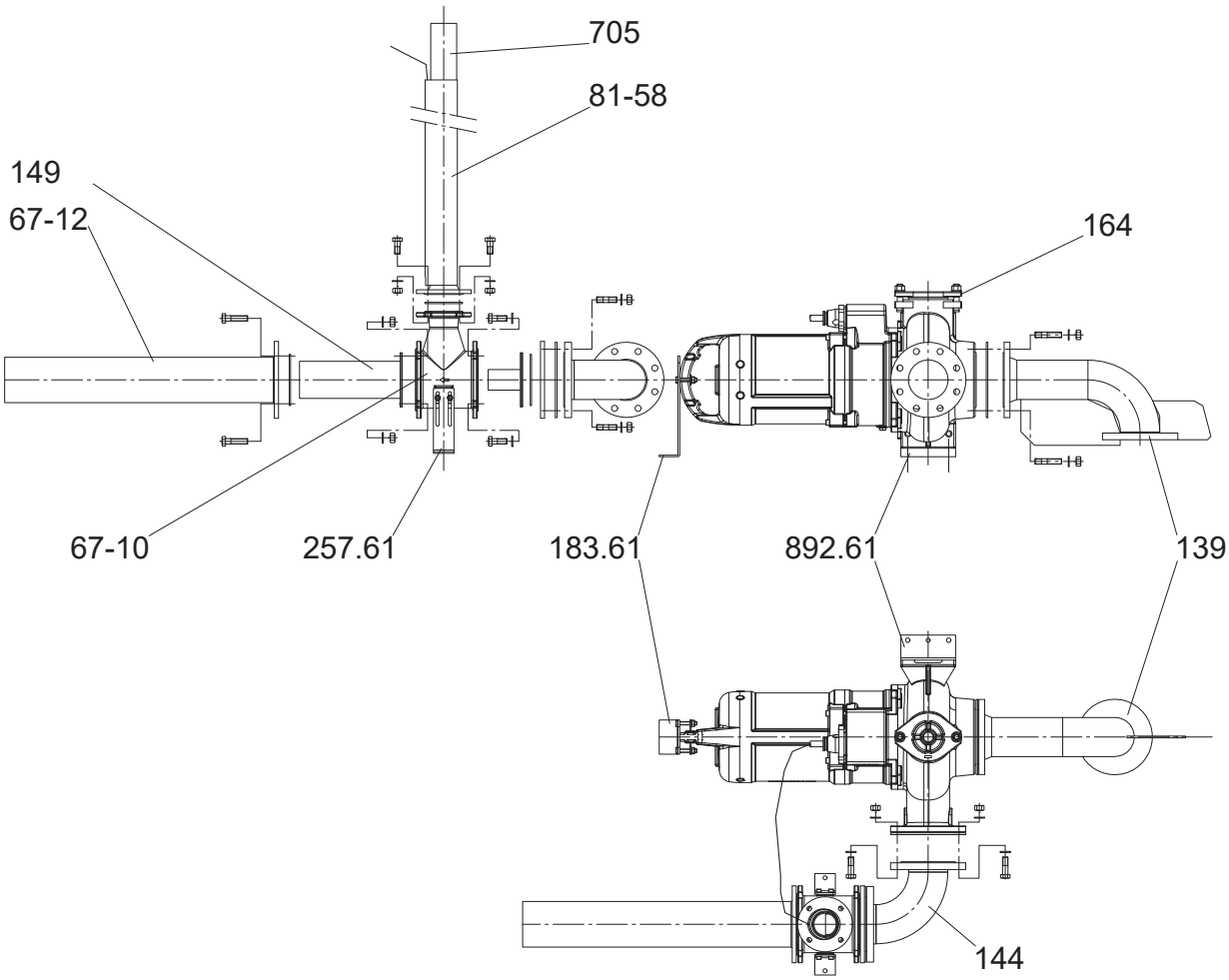

Fig. 35: Amajet M

Table 15: List of components

Part No.	Description	Part No.	Description
67-10	Ejector set	164	Inspection cover
67-12	Ejection pipe	183.61	Support foot
81-58	Cable conduit	257.61	Adjusting strip
139	Suction elbow	705	Vent line
144	Discharge elbow	892.61	Foot plate
149	Diffusor		

9.1.4 Amajet V

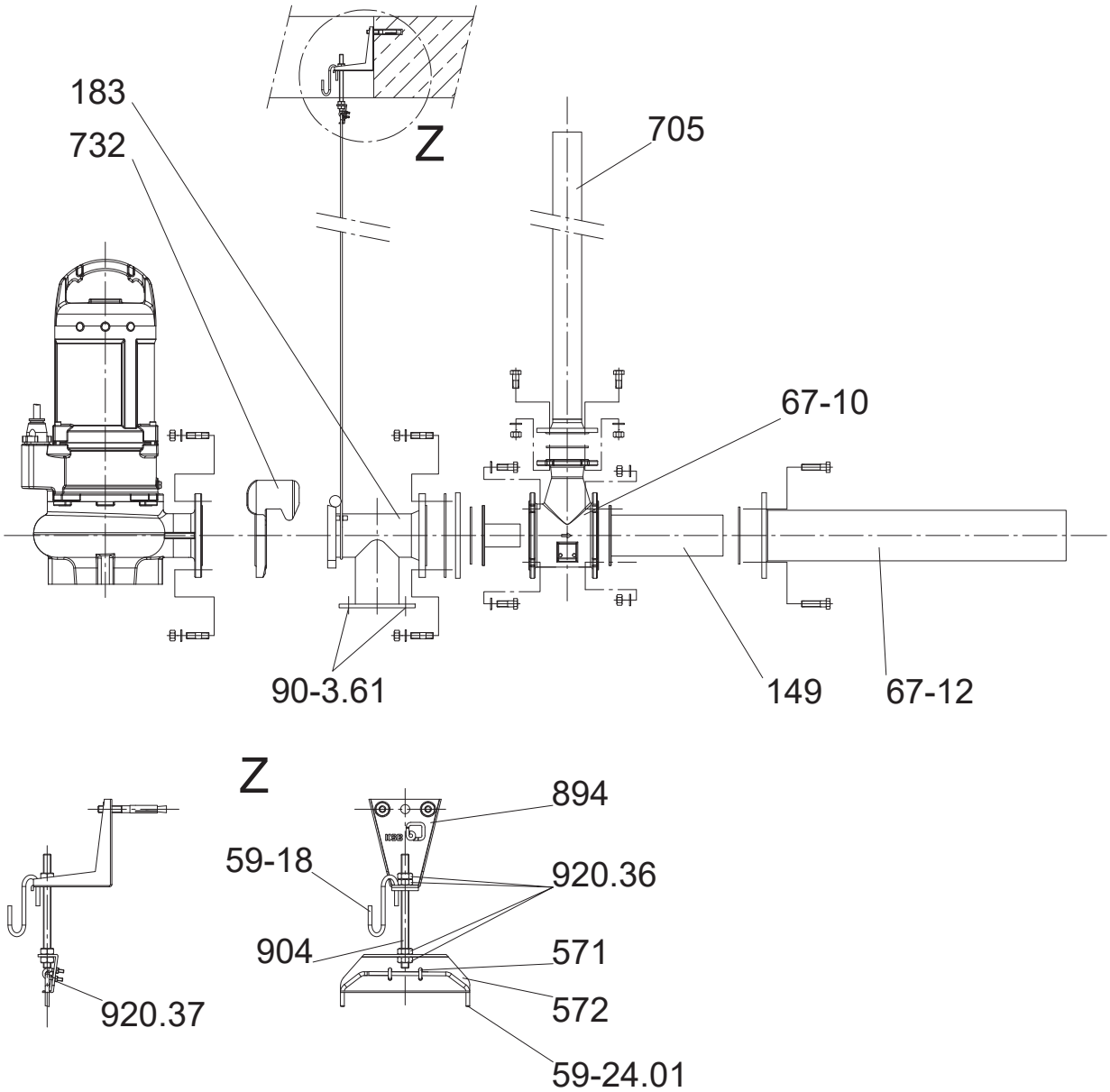

Fig. 36: Amajet V

Table 16: List of components

Part No.	Description	Part No.	Description
59-18	Hook	571	Bail
59-24.01	Wire	572	Guide wire suspension bracket
67-10	Ejector set	705	Vent line
67-12	Ejection pipe	732	Claw
90-3.61	Anchor bolt	894	Mounting bracket
149	Diffusor	904	Grub screw
183	Support foot	920.36/.37	Nut

9.1.5 SewerAmajet L

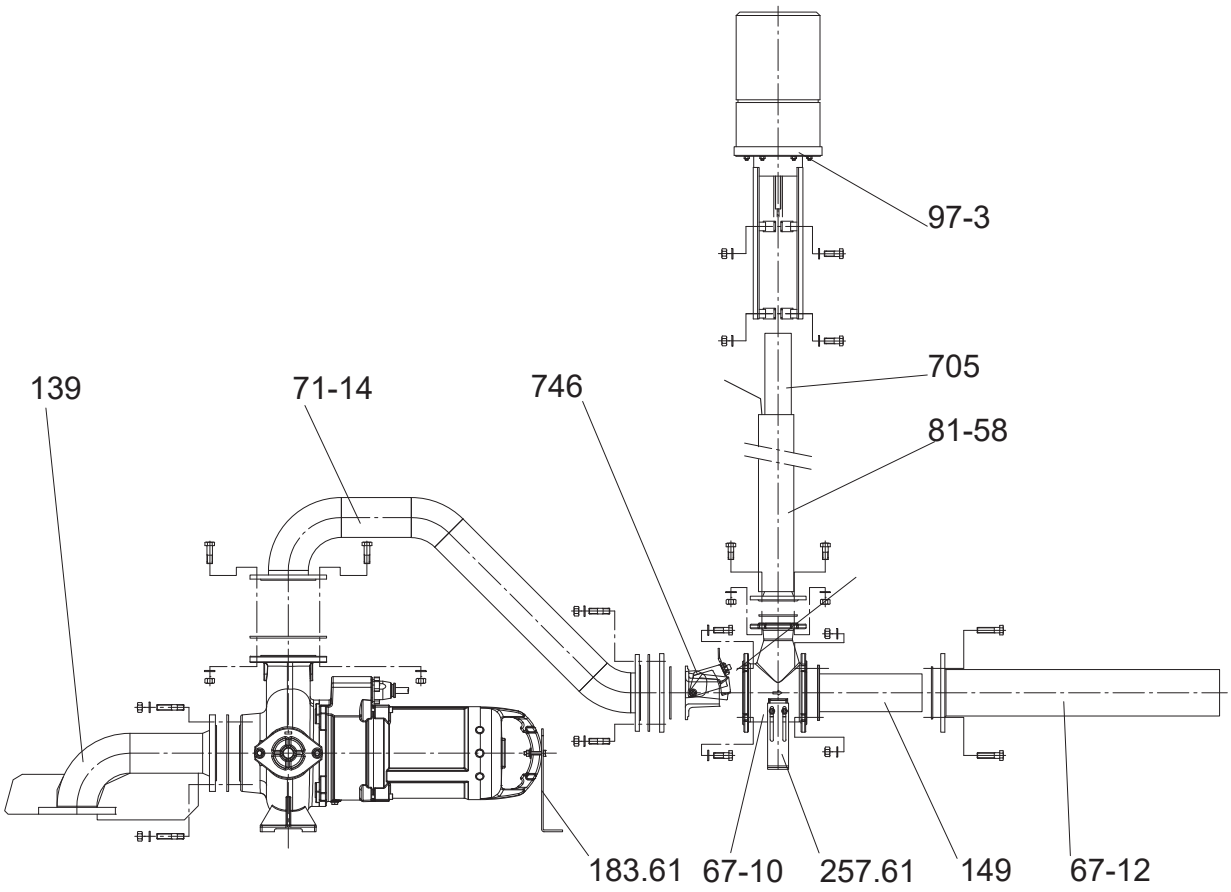

Fig. 37: SewerAmajet L

Table 17: List of components

Part No.	Description	Part No.	Description
67-10	Ejector set	149	Diffusor
67-12	Ejection pipe	183.61	Support foot
71-14	Connection pipe	257.61	Adjusting strip
81-58	Cable conduit	705	Vent line
97-3	Lifting magnet (including holder)	746	Throttle valve
139	Suction elbow		

9.1.6 SewerAmajet M

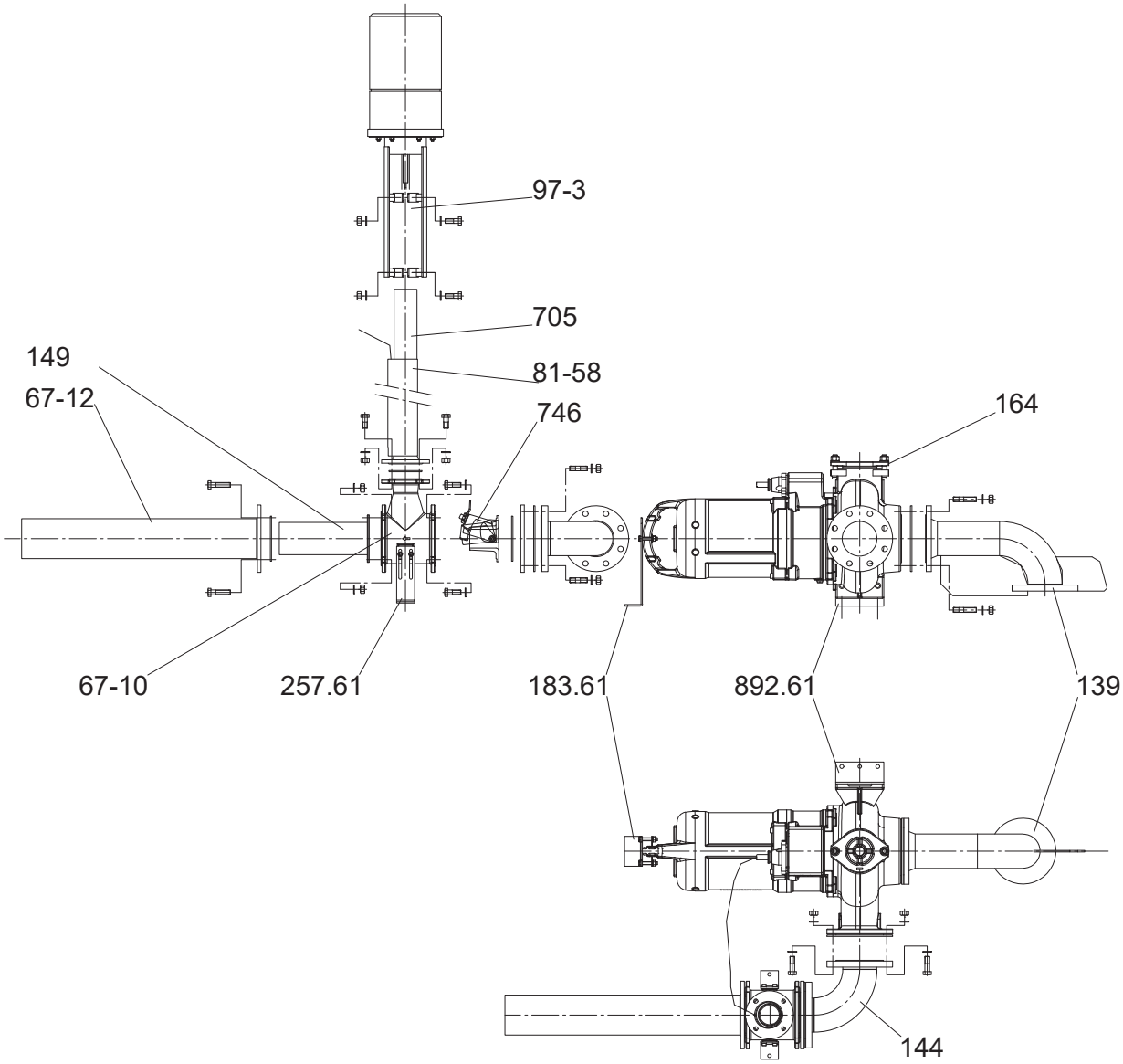

Fig. 38: SewerAmajet M

Table 18: List of components

Part No.	Description	Part No.	Description
67-10	Ejector set	164	Inspection cover
67-12	Ejection pipe	183.61	Support foot
81-58	Cable conduit	257.61	Adjusting strip
97-3	Lifting magnet (including holder)	705	Vent line
139	Suction elbow	746	Throttle valve
144	Discharge elbow	892.61	Foot plate
149	Diffusor		

9.1.7 SewerAmajet V

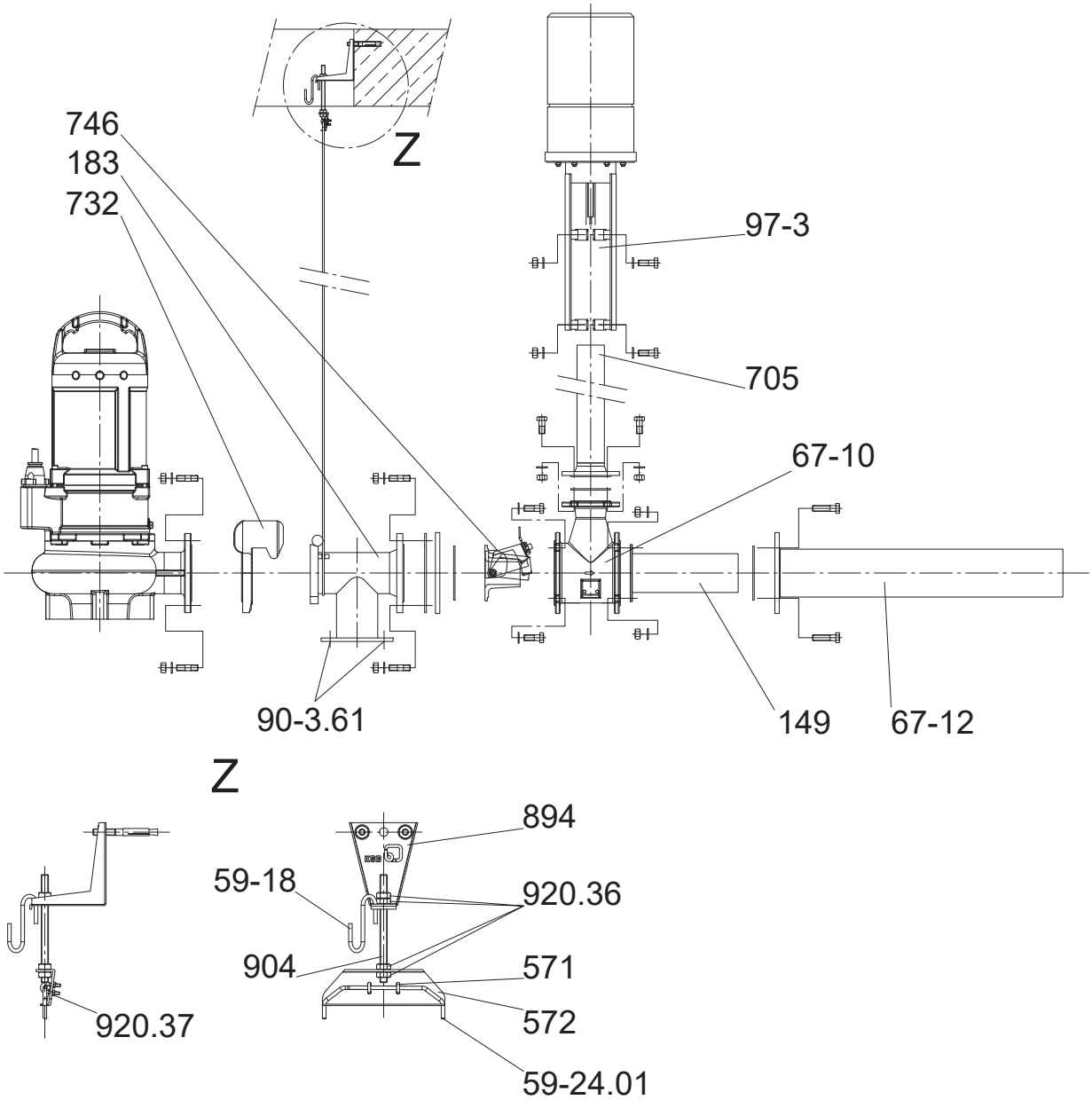

Fig. 39: SewerAmajet V

Table 19: List of components

Part No.	Description	Part No.	Description
59-18	Hook	571	Bail
59-24.01	Wire	572	Guide wire suspension bracket
67-10	Ejector set	705	Vent line
67-12	Ejection pipe	732	Claw
90-3.61	Anchor bolt	746	Throttle valve
97-3	Lifting magnet (including holder)	894	Mounting bracket
149	Diffusor	904	Grub screw
183	Support foot	920.36/37	Nut

1574.8/01-EN

Index

1574.8/01-EN

1574.8/01-EN

KSB Service GmbH
Turmstraße 92 • 06110 Halle (Germany)
Tel. +49 345 4826-4975
www.ksb.com